LIST OF MATERIALS					
ITEM	QTY -041	QTY -045	QTY -047	PART NUMBER	DESCRIPTION
1	X			D2580-041	SKIDTUBE ASSEMBLY
2		X		D2580-045	SKIDTUBE ASSEMBLY
3			X	D2580-047	SKIDTUBE ASSEMBLY
4	1	1	1	D2500-1-190	EXTRUSION
5			16	D2570	BUSHING
6	1	1	1	D2576-3	STEP
7		4		D2579	SPACER
8	16	16	8	D2594-1	PLUG
9	16	16	8	D2594-3	O-RING
10	1	1	1	D2596	205 WEB
11	1	1	1	D2855	AFT CAP
12	1	1		D3564-5	WEARSHOE
13	1	1		D3564-9	WEARSHOE
14	1	1		D3564-11	WEARSHOE
15	1	1		D3564-13	WEARSHOE
16	2	2		D3566-1	GASKET
17	1	1		D3566-5	GASKET
18	1	1		D3566-13	GASKET
19	20	20	24	D4202-1	SPACER
20			1	D4406-041	WEARPLATE ASSEMBLY
21			1	D4406-043	WEARPLATE ASSEMBLY
22	50	50		ALS7-1032-130 or AKS7-1032-130 or AKS4-1032-130 or AELS-1032-130	INSERT
23	50	50		AN3C4A	BOLT
24	2	2	2	AN3-5A	BOLT
25			8	AN4-45A	BOLT
26	50	50		NAS1149C0332R	WASHER (AN960C10L)
27	2	2	2	NAS1149D0332J	WASHER (AN960JD10L)
28			8	MS21042-4	NUT (OR MS21042L4)

F

F

GENERAL NOTES:

1) MATERIAL: N/A
2) FINISH: CHEMICAL CONVERSION PER DART QSI 005 4.1 PRIOR TO INSERTING D2596 WEB
   POWDER COAT ASSEMBLY (-041/-047) GLOSS WHITE (REF 4.3.5.1) PER DART QSI 005 4.3
   POWDER COAT ASSEMBLY (-045) GREEN SANDEX (REF 4.3.5.8) PER DART QSI 005 4.3
   BLACK ANTI-SKID PAINT AS INDICATED PER DART QSI 005 4.4.
3) TOLERANCES ARE PER DART QSI 018 UNLESS OTHERWISE NOTED.
4) UNITS: INCHES UNLESS OTHERWISE NOTED.
5) BREAK SHARP EDGES: 0.005 TO 0.010 MAX.
6) IDENTIFICATION: NONE
7) WEIGHT: D2580-041 = 34.5 lbs
   D2580-045 = 34.5 lbs
   D2580-047 = 37.7 lbs
8) WELDING PER DART QSI 004.
9) INSERT D2596 WEB TO LOCATION SHOWN OFF AFT END OF SKIDTUBE AND BOND WEB INTO OUTER TUBE WITH NON-STRUCTURAL SIKAFLEX-241 ADHESIVE PER DART QSI 015 BEFORE BENDING. ENSURE HOLES LINE-UP.
10) BEND AS A SMOOTH RADIUS STARTING WITH A MAXIMUM CENTERLINE RADIUS OF 60 AND ENDING WITH A MINIMUM RADIUS OF 30. A MAXIMUM REDUCTION OF 0.200 IN DIAMETER IS ALLOWABLE IN THE BENT PORTION OF THE TUBE.
11) USE DART DRILL TEMPLATE DT8217 & DT8937 ONLY FOR D2580-041/-045 TO LOCATE AND DRILL ∅0.297 HOLES FOR WEARSHOE INSERTS. INSTALL ALS7-1032-130 PER SECTIONS B-B AND F-F (50 PLACES) AFTER FINISH. INSTALL AN3C4A BOLTS AND NAS1149C0332R WASHERS WITH SIKAFLEX-241/-291.
12) INSERT D2594-1 PLUG C/W D2594-3 O-RING IN HOLES MARKED ‘P’ (BOTH SIDES OF TUBE) AFTER FINISH (16 PLACES FOR D2580-041/-045 AND 8 PLACES FOR D2580-047)
13) IT IS ACCEPTABLE TO GRIND A RELIEF IN THE D2855 AFT CAP TO PREVENT INTERFERENCE WITH THE SPACER AT THIS LOCATION

REV.	DESCRIPTION	BY	DATE
PF1	REDRAWN, INCLUDED DEO 9094/ 9097	DC	13.06.20
E	ADD D2580-047 (ZN C4-7) AND D2580-7 (ZN B3-8); INCLUDED DEO D2580-D-1; REFORMATTED DRAWING TO CURRENT STANDARDS; DT8217 & DT8937 WAS TD2577-205 (ZN C4-1)	RF	11.06.21
D	CHANGE TO SS WEARPLATES AND GASKETS, INCLUDE DEO 9124/ 9183	PH	07.04.05
C	REDRAWN, INCLUDED DEO 9094/ 9097	CP	98.08.26
B	AS MANUFACTURED	DS	96.12.02
A	NEW ISSUE	DS	96.09.16

DESIGN		**DART AEROSPACE LTD** **HAWKESBURY, ONTARIO, CANADA**
DRAWN	DC	
CHECKED	RF	DRAWING NO. D2580 — REV. PF1 — SHEET 1 OF 8
MFG. APPR.		
APPROVED		TITLE: 205 SKIDTUBE ASSEMBLY — SCALE: NTS
DE APPR.		
DATE	13.06.20	

COPYRIGHT © 1996 BY DART AEROSPACE LTD
THIS DOCUMENT IS PRIVATE AND CONFIDENTIAL AND IS SUPPLIED ON THE EXPRESS CONDITION THAT IT IS NOT TO BE USED FOR ANY PURPOSE OR COPIED OR COMMUNICATED TO ANY OTHER PERSON WITHOUT WRITTEN PERMISSION FROM DART AEROSPACE LTD.

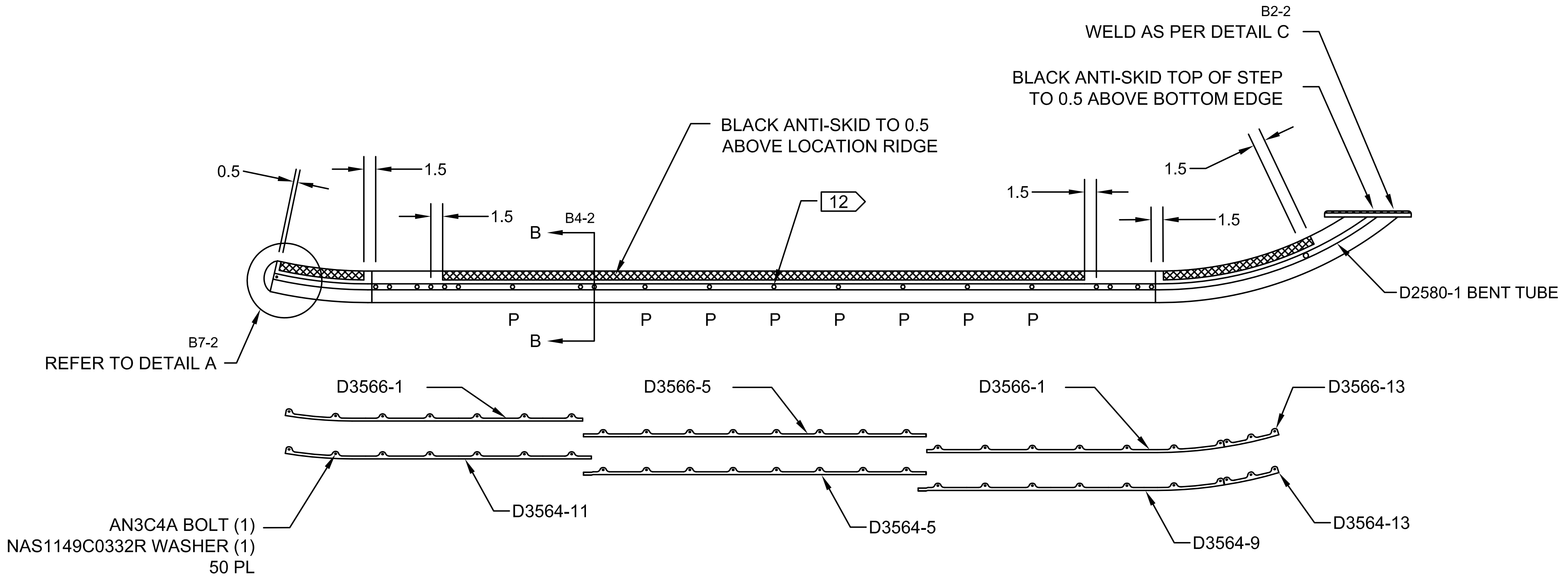

D2580-041 ASSEMBLY DETAIL

DETAIL A C7-2
SCALE 5X

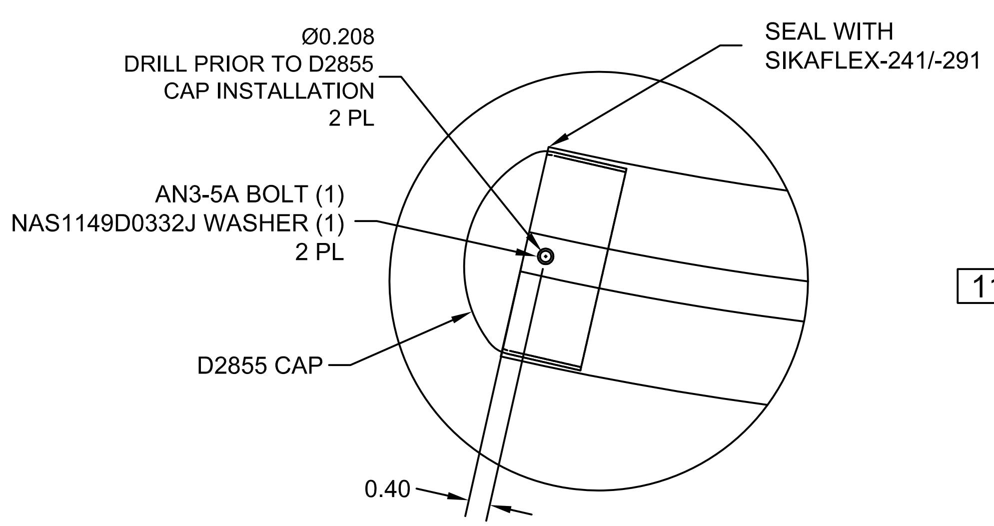

D5-2
SECTION B-B
SCALE 5X

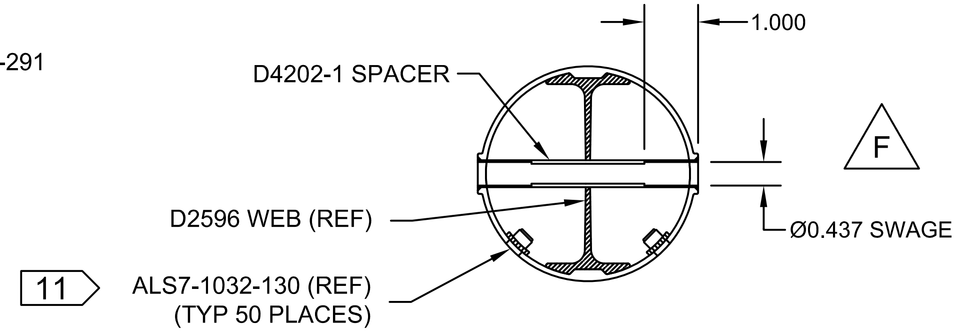

F
AFTER DRILLING AND BENDING ASSEMBLY
PERFORM THE FOLLOWING FOR Ø0.508 HOLES ONLY:
1. INSERT D4202-1 SPACER, 20 PLACES
2. SWAGE TO Ø0.437 X 1.00 DEEP PER QSI 002
3. TRIM / GRIND FLUSH PER QSI 002

DETAIL C D3-2
SCALE 5X

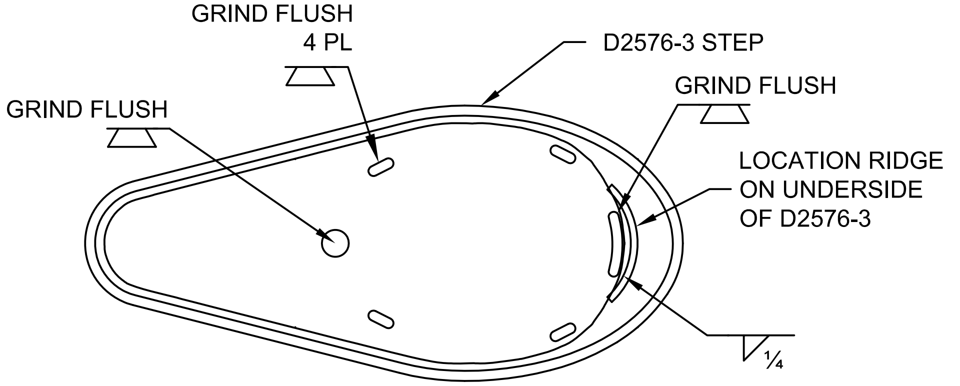

DESIGN	[signature]	**DART AEROSPACE LTD** HAWKESBURY, ONTARIO, CANADA	
DRAWN	DC		
CHECKED	RF	DRAWING NO.	REV. PF1
MFG. APPR.		D2580	SHEET 2 OF 8
APPROVED		TITLE	SCALE
DE APPR.		205 SKIDTUBE ASSEMBLY	NTS
DATE	13.06.20		

COPYRIGHT © 1996 BY DART AEROSPACE LTD
THIS DOCUMENT IS PRIVATE AND CONFIDENTIAL AND IS SUPPLIED ON THE EXPRESS CONDITION THAT IT IS NOT TO BE USED FOR ANY PURPOSE OR COPIED OR COMMUNICATED TO ANY OTHER PERSON WITHOUT WRITTEN PERMISSION FROM DART AEROSPACE LTD.

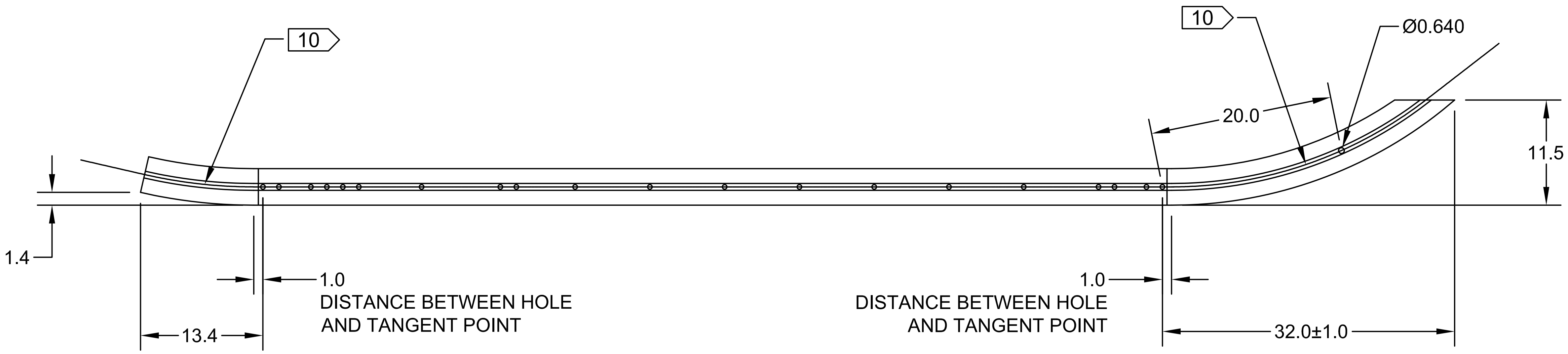

D2580-1 BENT TUBE
(MAKE FROM D2580-101 TUBE)

DESIGN	[signature]	**DART AEROSPACE LTD** **HAWKESBURY, ONTARIO, CANADA**	
DRAWN	DC		
CHECKED	RF	DRAWING NO.	REV. PF1
MFG. APPR.		D2580	SHEET 3 OF 8
APPROVED		TITLE	SCALE
DE APPR.		205 SKIDTUBE ASSEMBLY	NTS
DATE	13.06.20		

COPYRIGHT © 1996 BY DART AEROSPACE LTD
THIS DOCUMENT IS PRIVATE AND CONFIDENTIAL AND IS SUPPLIED ON THE EXPRESS CONDITION THAT IT IS NOT TO BE USED FOR ANY PURPOSE OR COPIED OR COMMUNICATED TO ANY OTHER PERSON WITHOUT WRITTEN PERMISSION FROM DART AEROSPACE LTD.

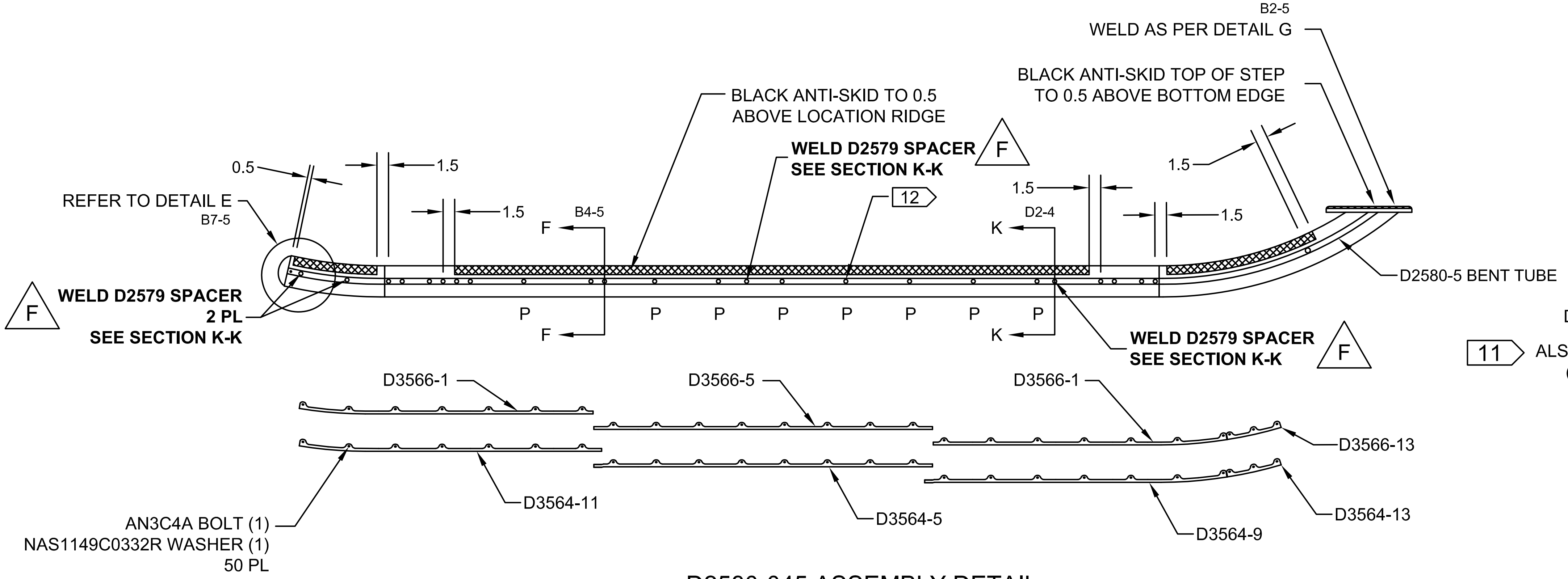

D2580-045 ASSEMBLY DETAIL

F

SECTION K-K D5-4
SCALE 5X

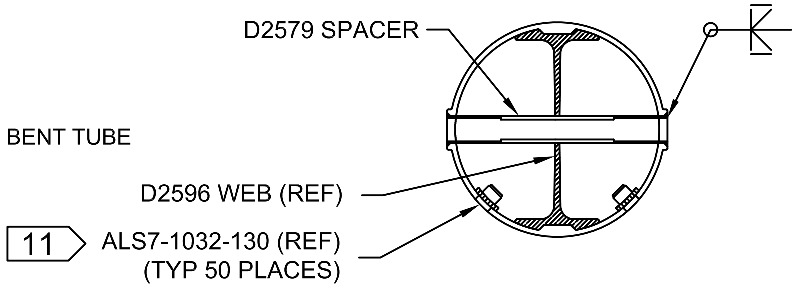

AFTER DRILLING AND BENDING ASSEMBLY
PERFORM THE FOLLOWING FOR Ø0.508 HOLES ONLY:
1. CHAMFER HOLE 0.050 X 45°
2. INSERT D2579 SPACER (4 PLACES)
3. WELD INTO PLACE AND GRIND FLUSH
4. C'BORE D2579 SPACER TO Ø0.437 X 1.00 DEEP

DETAIL E D7-5
SCALE 5X

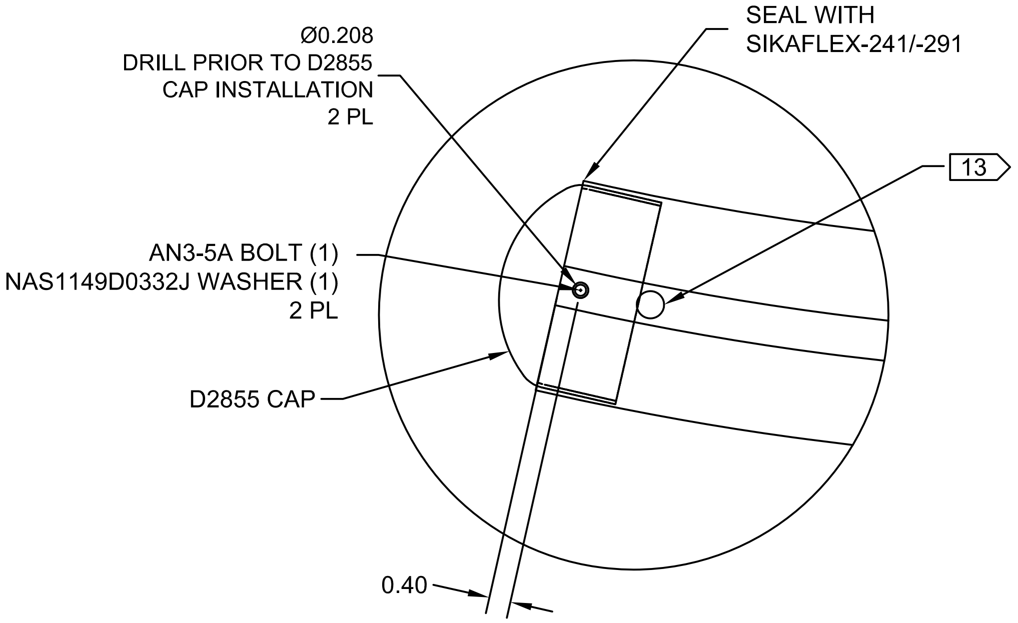

SECTION F-F D5-5
SCALE 5X

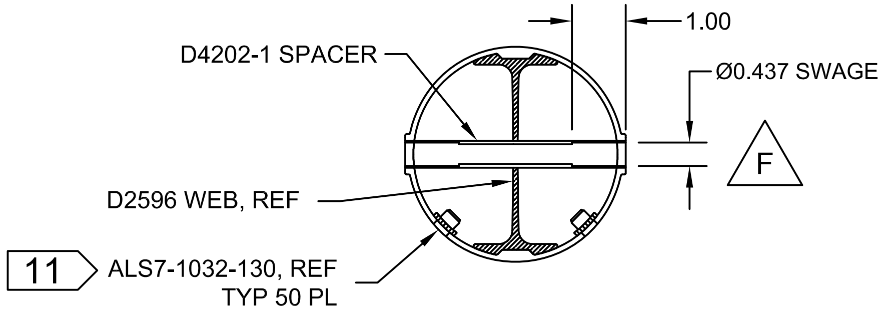

F

AFTER DRILLING AND BENDING ASSEMBLY
PERFORM THE FOLLOWING FOR Ø0.508 HOLES ONLY:
1. INSERT D4202-1 SPACER (20 PLACES)
2. SWAGE TO Ø0.437 X 1.00 DEEP PER QSI 002
3. TRIM/GRIND FLUSH PER QSI 002

DETAIL G D3-5
SCALE 5X

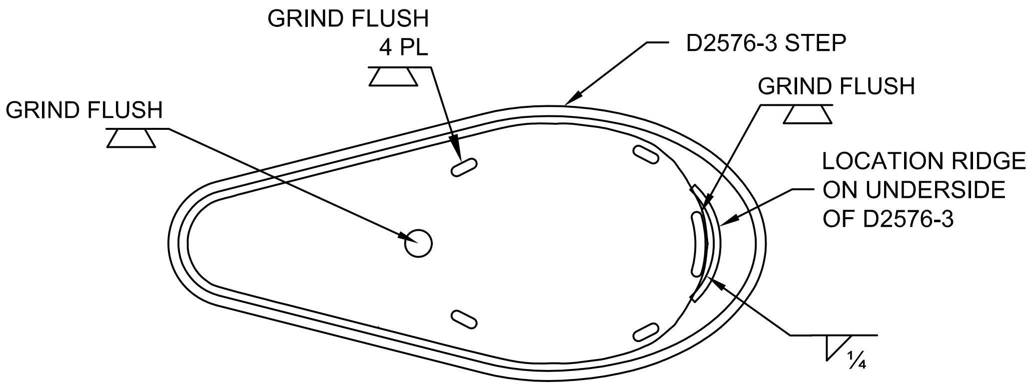

DESIGN	[signature]	**DART AEROSPACE LTD** HAWKESBURY, ONTARIO, CANADA	
DRAWN	DC		
CHECKED	RF	DRAWING NO.	REV. PF1
MFG. APPR.		D2580	SHEET 4 OF 8
APPROVED		TITLE	SCALE
DE APPR.		205 SKIDTUBE ASSEMBLY	NTS
DATE	13.06.20		

COPYRIGHT © 1996 BY DART AEROSPACE LTD
THIS DOCUMENT IS PRIVATE AND CONFIDENTIAL AND IS SUPPLIED ON THE EXPRESS CONDITION THAT IT IS NOT TO BE USED FOR ANY PURPOSE OR COPIED OR COMMUNICATED TO ANY OTHER PERSON WITHOUT WRITTEN PERMISSION FROM DART AEROSPACE LTD.

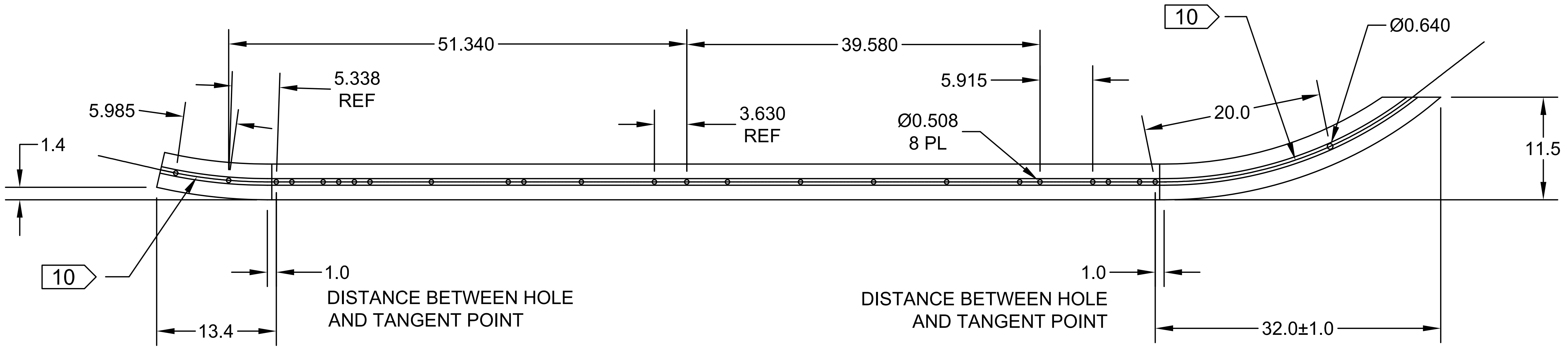

D2580-5 BENT TUBE
(MAKE FROM D2580-101 TUBE)

DESIGN	(signature)	**DART AEROSPACE LTD** HAWKESBURY, ONTARIO, CANADA	
DRAWN	DC		
CHECKED	RF	DRAWING NO. D2580	REV. PF1 SHEET 5 OF 8
MFG. APPR.			
APPROVED		TITLE 205 SKIDTUBE ASSEMBLY	SCALE NTS
DE APPR.			
DATE	13.06.20		

COPYRIGHT © 1996 BY DART AEROSPACE LTD
THIS DOCUMENT IS PRIVATE AND CONFIDENTIAL AND IS SUPPLIED ON THE EXPRESS CONDITION THAT IT IS NOT TO BE USED FOR ANY PURPOSE OR COPIED OR COMMUNICATED TO ANY OTHER PERSON WITHOUT WRITTEN PERMISSION FROM DART AEROSPACE LTD.

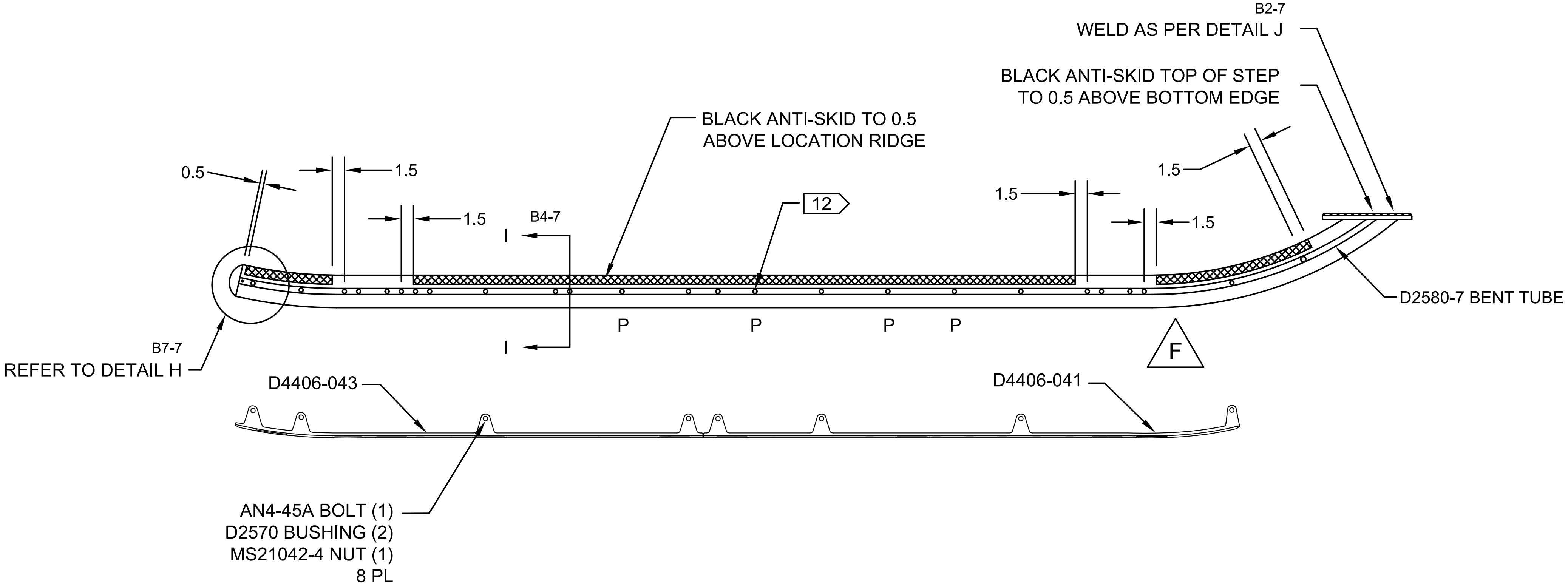

D2580-047 ASSEMBLY DETAIL

DETAIL H C6-7
SCALE 5X

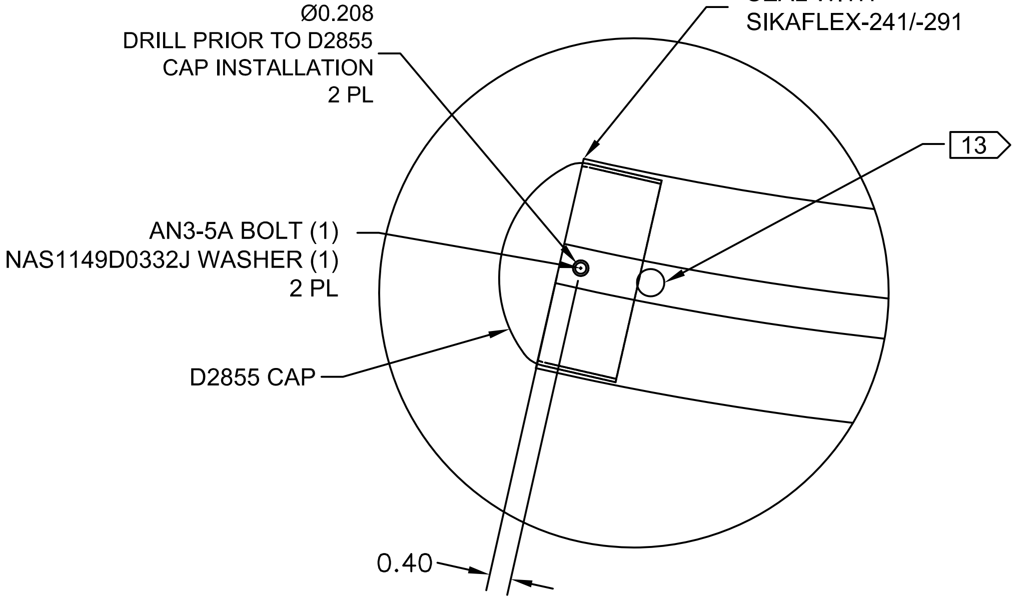

SECTION I-I D5-7
SCALE 5X

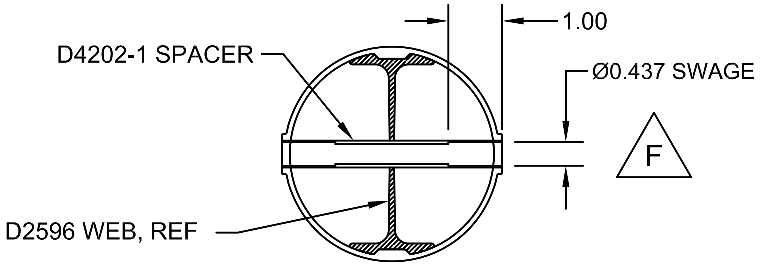

DETAIL J D3-7
SCALE 5X

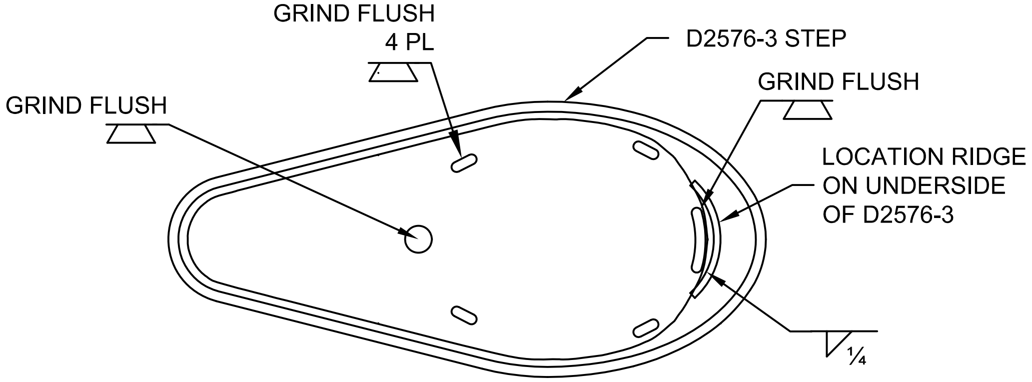

F AFTER DRILLING AND BENDING ASSEMBLY
PERFORM THE FOLLOWING FOR Ø0.508 HOLES ONLY:
1. INSERT D4202-1 SPACER (24 PLACES)
2. SWAGE TO Ø0.437 X 1.00 DEEP PER QSI 002
3. TRIM/GRIND FLUSH PER QSI 002

DESIGN	[signature]	DART AEROSPACE LTD HAWKESBURY, ONTARIO, CANADA
DRAWN	DC	
CHECKED	RF	DRAWING NO. REV. PF1
MFG. APPR.		D2580 SHEET 6 OF 8
APPROVED		TITLE SCALE
DE APPR.		205 SKIDTUBE ASSEMBLY NTS
DATE	13.06.20	

COPYRIGHT © 1996 BY DART AEROSPACE LTD
THIS DOCUMENT IS PRIVATE AND CONFIDENTIAL AND IS SUPPLIED ON THE EXPRESS CONDITION THAT IT IS NOT TO BE USED FOR ANY PURPOSE OR COPIED OR COMMUNICATED TO ANY OTHER PERSON WITHOUT WRITTEN PERMISSION FROM DART AEROSPACE LTD.

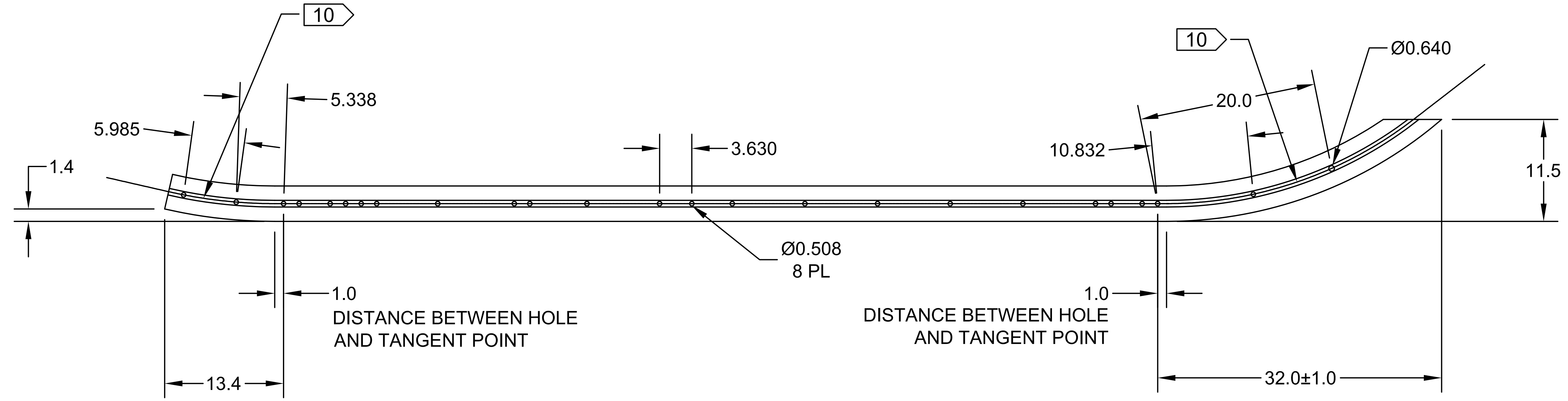

D2580-7 BENT TUBE

(MAKE FROM D2580-101 TUBE)

DESIGN		**DART AEROSPACE LTD** **HAWKESBURY, ONTARIO, CANADA**	
DRAWN	DC		
CHECKED	RF	DRAWING NO.	REV. PF1
MFG. APPR.		D2580	SHEET 7 OF 8
APPROVED		TITLE	SCALE
DE APPR.		205 SKIDTUBE ASSEMBLY	NTS
DATE	13.06.20	**COPYRIGHT © 1996 BY DART AEROSPACE LTD** THIS DOCUMENT IS PRIVATE AND CONFIDENTIAL AND IS SUPPLIED ON THE EXPRESS CONDITION THAT IT IS NOT TO BE USED FOR ANY PURPOSE OR COPIED OR COMMUNICATED TO ANY OTHER PERSON WITHOUT WRITTEN PERMISSION FROM DART AEROSPACE LTD.	

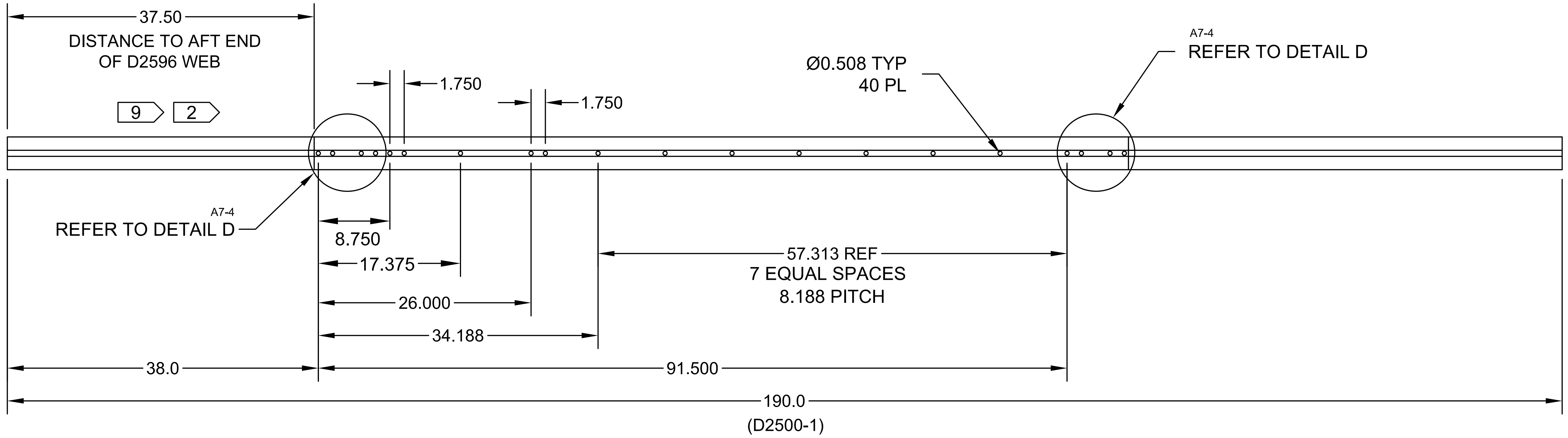

D2580-101 TUBE

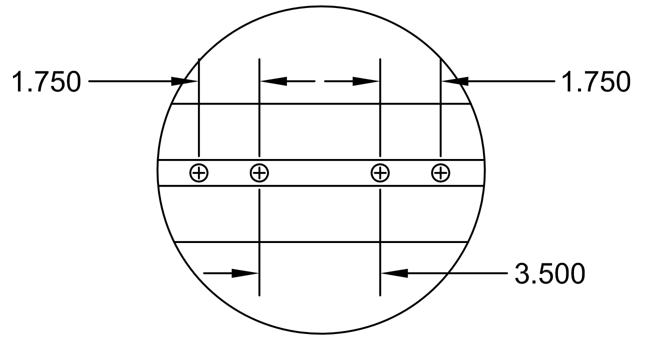

DETAIL D D3-4 C7-4
SCALE 5X

DESIGN		**DART AEROSPACE LTD** **HAWKESBURY, ONTARIO, CANADA**
DRAWN	DC	
CHECKED	RF	DRAWING NO. REV. PF1
MFG. APPR.		D2580 SHEET 8 OF 8
APPROVED		TITLE SCALE
DE APPR.		205 SKIDTUBE ASSEMBLY NTS
DATE	13.06.20	

COPYRIGHT © 1996 BY DART AEROSPACE LTD
THIS DOCUMENT IS PRIVATE AND CONFIDENTIAL AND IS SUPPLIED ON THE EXPRESS CONDITION THAT IT IS NOT TO BE USED FOR ANY PURPOSE OR COPIED OR COMMUNICATED TO ANY OTHER PERSON WITHOUT WRITTEN PERMISSION FROM DART AEROSPACE LTD.